ISANTA MEMBER

# MC60-34

## Metal Connector

## Parts Reference Guide

## Guía de referencia de piezas

## Pièces Guide de référence

Schematic Drawings Inside
Plano esquemático en el interior
Schéma intérieur

**Repair Kits**
YK0825EU
YK0826EU

SENCO®

**Senco Brands, Inc.**
**4270 Ivy Pointe Blvd.**
**Cincinnati, OH 45245**
**1-800-543-4596**
**EMEA: www.senco-emea.com**

**NFE06K • Revised December 1, 2015 (Replaces 3/19/2015)**

© 2014 by Senco Brands, Inc.

SENCO®

| Tool # | Model |
|---|---|
| 6K2001N | MC60-34 |

# Contents Of YK0825EU Repair Kit
## Contents Of YK0826EU Repair Kit

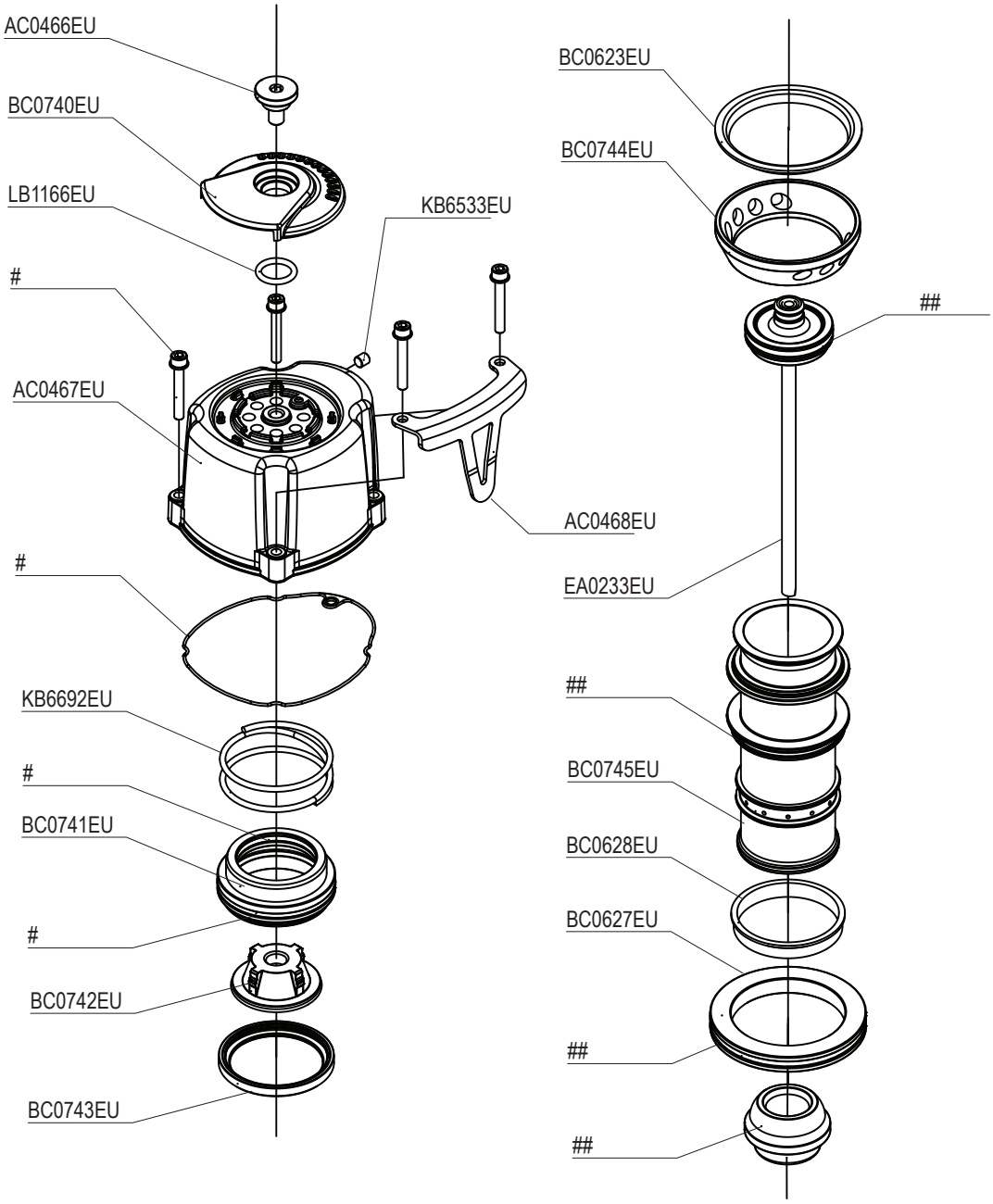


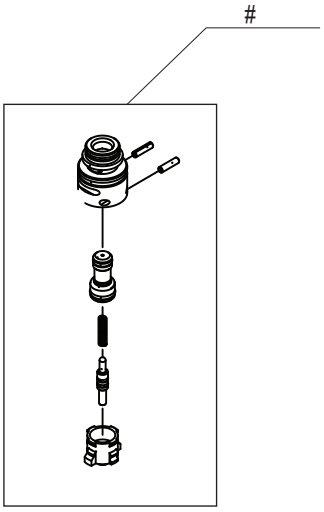

# Metal Connector

## MC60-34

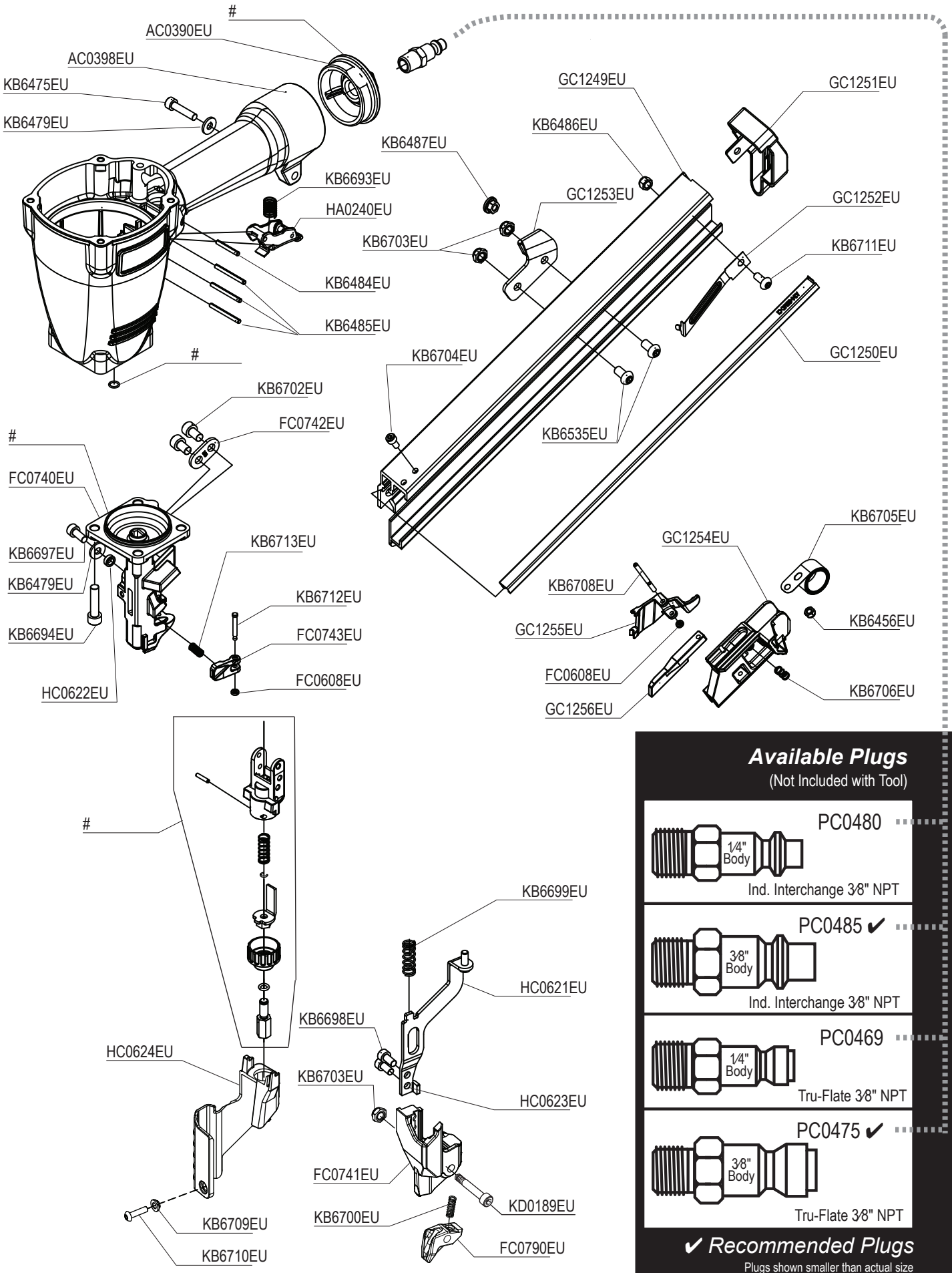

# Metal Connector

# MC60-34

## REPLACEMENT PARTS LIST • LISTA DE PARTES DE REPUESTO • LISTE DE PIÈCES DE RECHANGE

| PART NO. | DESCRIPTION | DESCRIPCIÓN | DÉSIGNATION |
|---|---|---|---|
| AC0390EU | CAP | TAPA | BOUCHON |
| AC0398EU | MAINBODY | CARCASA | CORPS |
| AC0466EU | SCREW | TORNILLO | VIS |
| AC0467EU | CAP | TAPA | BOUCHON |
| AC0468EU | RETAINER | JUNTA TÓRICA | RETENUE |
| BC0623EU | RING | ANILLO | ANNEAU |
| BC0627EU | SPACER | SEPARADOR | ENTRETOISE |
| BC0628EU | RING | ANILLO | ANNEAU |
| BC0740EU | DEFLECTOR | DESVIADOR | DÉFLECTEUR |
| BC0741EU | VALVE | VÁLVULA | VALVE |
| BC0742EU | SEAL | SELLO | JOINT |
| BC0743EU | COLLAR | CILINDRO | CYLINDRE |
| BC0744EU | RING | ANILLO | ANNEAU |
| BC0745EU | CYLINDER | CILINDRO | CYLINDRE |
| EA0233EU | DRIVER ASY | PERCUSOR | COUTEAU |
| FC0608EU | RETAINER | JUNTA TÓRICA | RETENUE |
| FC0740EU | GUIDEBODY | PLACA DE NARIZ | FRONT |
| FC0741EU | SAFETY ELEMENT | SEGURO | PALPEUR DE SÉCURITÉ |
| FC0742EU | SEAL | SELLO | JOINT |
| FC0743EU | PLATE | PLACA | PLAQUE |
| FC0790EU | GUIDE BLOCK | BLOQUE | BLOC |
| GC1249EU | MAGAZINE | CARGADOR | MAGASIN |
| GC1250EU | TUBE | CILINDRO | CYLINDRE |
| GC1251EU | COVER | CUBIERTA | COUVERCLE |
| GC1252EU | STOP | TOPPE | ARRÊT |
| GC1253EU | PLATE | PLACA | PLAQUE |
| GC1254EU | COVER | CUBIERTA | COUVERCLE |
| GC1255EU | FEEDERSHOE | ALIMENTADOR | POUSSOIR |
| GC1256EU | STOP | TOPPE | ARRÊT |
| HA0240EU | TRIGGER | GATILLO | GÂCHETTE |
| HC0621EU | SAFETY ELEMENT | SEGURO | PALPEUR DE SÉCURITÉ |
| HC0622EU | LATCH | UÑETA | DOIGT DE RETENUE |
| HC0623EU | SAFETY ELEMENT | SEGURO | PALPEUR DE SÉCURITÉ |
| HC0624EU | COVER | CUBIERTA | COUVERCLE |
| KB6456EU | NUT | TUERCA | ÉCROU |
| KB6475EU | SCREW | TORNILLO | VIS |
| KB6479EU | WASHER | ARANDELA | RONDELLE |
| KB6481EU | RING | ANILLO | ANNEAU |
| KB6484EU | PIN | PASADOR | GOUPILLE |
| KB6485EU | PIN | PASADOR | GOUPILLE |
| KB6486EU | NUT | TUERCA | ÉCROU |
| KB6487EU | SCREW | TORNILLO | VIS |
| KB6533EU | SCREW | TORNILLO | VIS |
| KB6535EU | SCREW | TORNILLO | VIS |
| KB6692EU | SPRING | RESORTE | RESSORT |
| KB6693EU | SPRING | RESORTE | RESSORT |
| KB6694EU | SCREW | TORNILLO | VIS |
| KB6697EU | SCREW | TORNILLO | VIS |
| KB6698EU | SCREW | TORNILLO | VIS |
| KB6699EU | SPRING | RESORTE | RESSORT |
| KB6700EU | SPRING | RESORTE | RESSORT |
| KB6701EU | PIN | PASADOR | GOUPILLE |
| KB6702EU | SCREW | TORNILLO | VIS |
| KB6703EU | NUT | TUERCA | ÉCROU |
| KB6704EU | SCREW | TORNILLO | VIS |
| KB6705EU | SPRING | RESORTE | RESSORT |
| KB6706EU | SPRING | RESORTE | RESSORT |
| KB6708EU | PIN | PASADOR | GOUPILLE |
| KB6709EU | BUSHING | CASQUILLO | DOUILLE |
| KB6710EU | SCREW | TORNILLO | VIS |
| KB6711EU | SCREW | TORNILLO | VIS |
| KB6712EU | PIN | PASADOR | GOUPILLE |
| KB6713EU | SPRING | RESORTE | RESSORT |
| KD0189EU | SCREW | TORNILLA | VIS |
| LB1166EU | SEAL | SELLO | JOINT |